DRAWING NO.
27-8130-CUST

REVISIONS

01	OFFICAL RELEASE						
	08-25-09	T W	B Y	T			Betty 2009.09.08 08:40:14 +08'00'

Description:	Adapter BNC Plug to Plug		
Part No:	27-8130		
Application:	Adapter		
Crimp Tool:	N/A		
Impedance:	50 Ohms		
Fequency Range:	0-4 GHz		
Material:	Body	Brass	Nickel Plated
	Contact	Brass	Gold Plated
	Insulator	Derlin	
	Crimp Sleeve	Brass	Nickel Plated
	Coupling Nut	Zinc	Nickel Plated
RoHS Compliance:	Yes		
Technical Detail:	Refer to Emerson Document P/N 27-0000		

受控 CONTROLLED DOCUMENT					
编号 P/N	27-8120-CUST	版本 Rev	01	日期 Rel'd Date	SEP 14,09

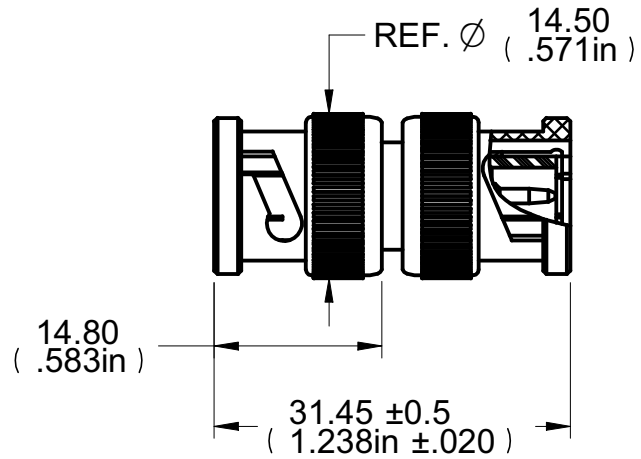

DIM OUTLINE

CUSTOMER COPY

TOLERANCE UNLESS OTHERWISE SPECIFIED		DRAWN BY TERRY.W	DATE 08-25-09
DECIMALS	mm	CHECKED BY TERRY.W	DATE 08-25-09
X	± 0.5		
X.X	± 0.3	APPROVED BY THOMAS	DATE 08-25-09
X.XX	± 0.1		
ANGLES	± 0.5°	U/M mm	

THIS DRAWING WAS PRODUCED BY COMPUTER, DO NOT SCALE DRAWING OR UPDATE MANUALLY.

EMERSON Network Power — Connectivity Solutions

TITLE: ADAPTER BNC PLUG TO PLUG

SHEET	DRAWING NO.	SIZE
1 OF 1	27-8130-CUST	A