REVISIONS		
ISS	ZONE	DESCRIPTION\PER REQUEST\DATE

業務部

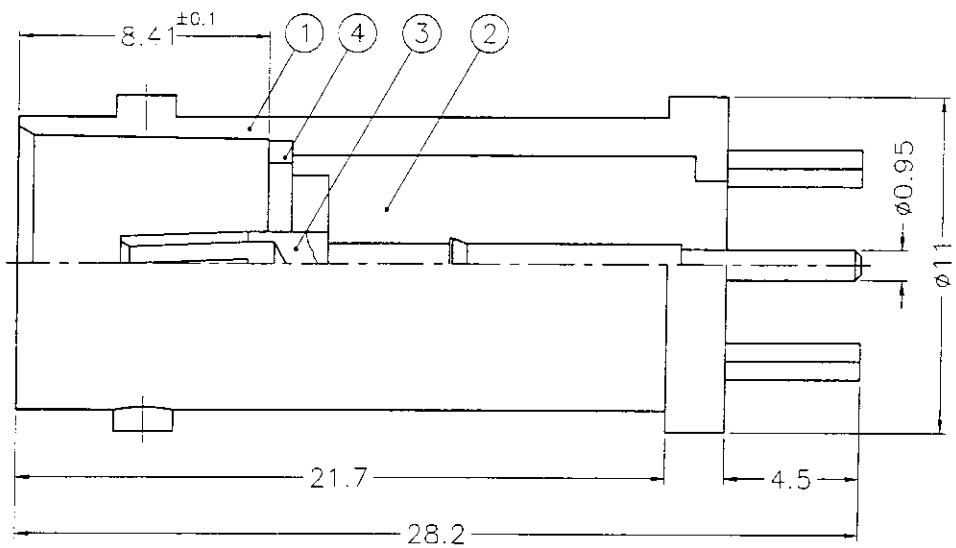

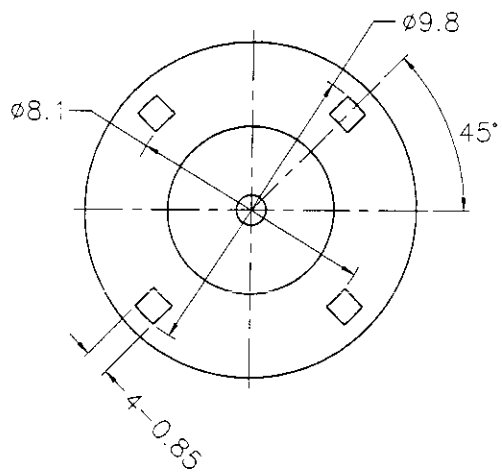

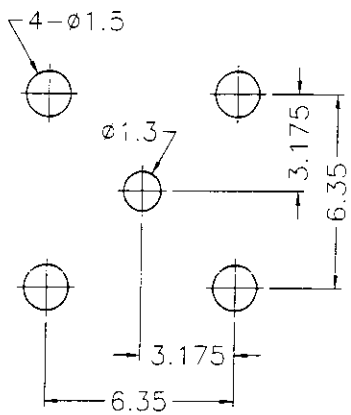

PCB MOUNTING HOLE
(印刷電路板架設孔)

圖
89. 1. 11
R & D

NOTES: FINISH (PLATING THICKNESS IN MICRO-INCHES)
1. BRASS PER QQ-B-626
2. NICKEL PL. 100 MIN. THICK OVER COPPER STRIKE
3. PHOSPHOR BRONZE PER QQ-B-750
4. GOLD PL. 3 MIN. THICK OVER NICKEL PL. 100 MIN. THICK OVER COPPER STRIKE
5. TEFLON MIL-P-19468

NO.	DESCRIPTION	MATERIAL	FINISH	Q'TY	DRAWING NO.
4	LOCK RING	NOTE 1	NOTE 2	1	B6321G1-002-5
3	CONTACT PIN	NOTE 3	NOTE 4	1	B6251C1-002-3
2	INSULATOR	NOTE 5	NATURAL	1	B6252C1-002-2T -75
1	BODY	NOTE 1	NOTE 2	1	B6251C1-002-1

DIMENSIONS ARE IN MILLIMETERS

UNLESS OTHERWISE SPECIFIED TOLERANCES
0.5-6 = ±0.2
6-30 = ±0.4
30-120 = ±0.6
120-315 = ±1
315-1000 = ±1.6
1000-2000 = ±2.4

SCALE 4/1 ISSUE A

PART NO.

APPROVED DATE 01-07-00'
CHECKED DATE 01-07-00'
DRAWN DATE 01-07-00'

Amphenol - Kai Jack
TAINAN TAIWAN

TITLE
BNC P.C. MOUNT RECEPT. JACK

DRAWING NO.
KJ-B6251C1-002-NT3G-75

FILE NO. F:\DWG\B\6251C1\002\75\NT3G

BR5928