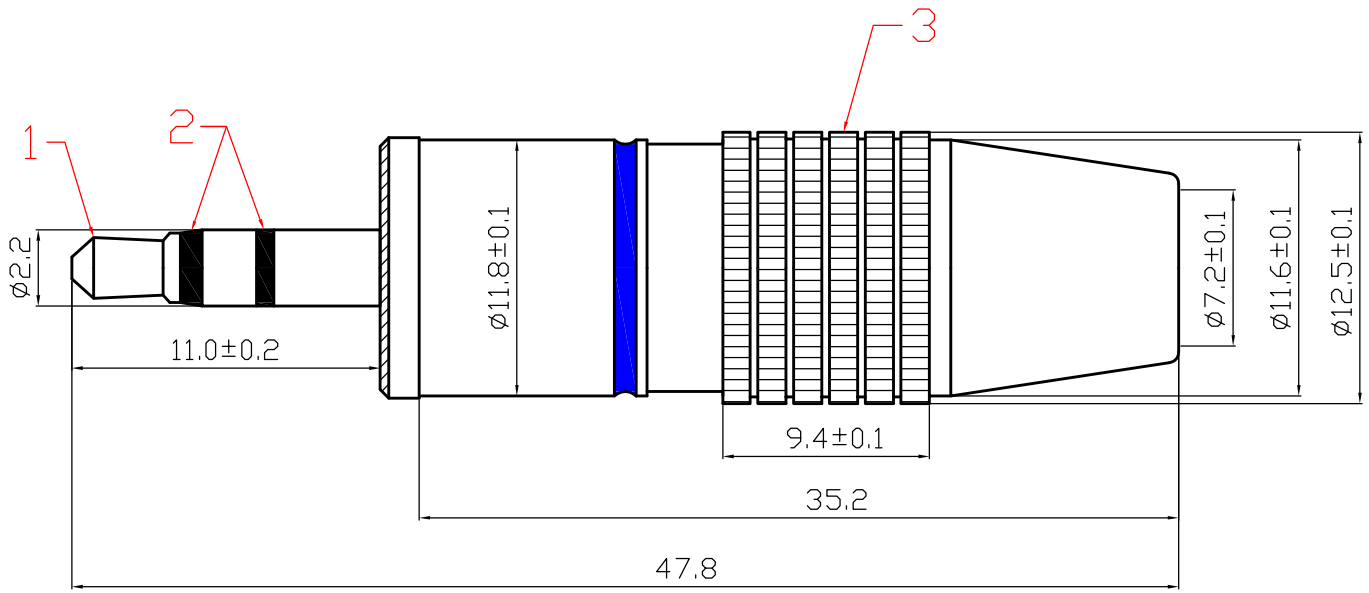

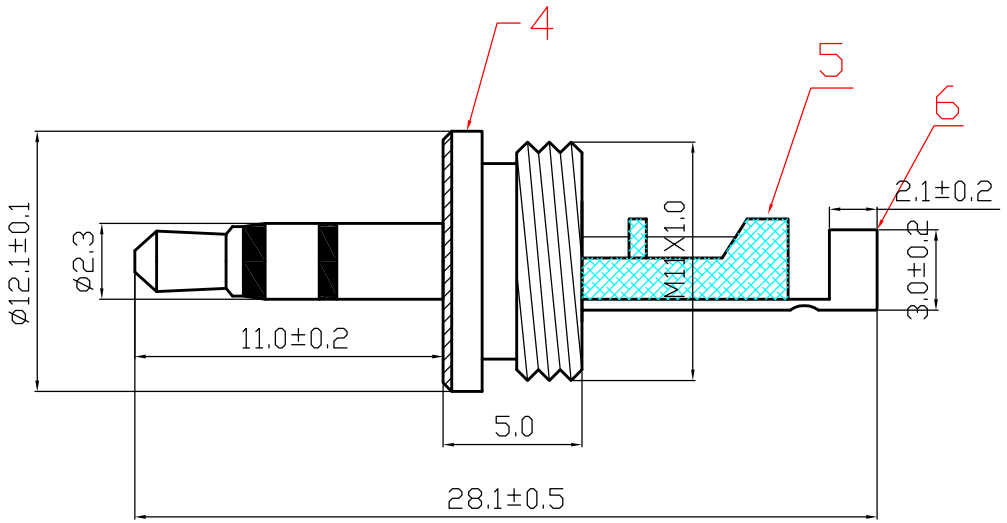

ITEM	DESIGNATION	MATERIAL
6	CRIMPING PATCH	Cu
5	DIELECTRIC	POM
4	BODY	Cu
3	SHELL	Cu
2	DIELECTRIC	POM
1	FRONT POINT	Cu

TOLERANCE	
0 – 10	±0.05
10 – 99	±0.5
100 – 999	±10.0
1000 – 9999	±100.00
10000 – 99999	±1000.00

SIGNATURES	DATE
DRAFT: cheng huan	09.03.20
CHECKEO:	
APPROVAL:	

今入企业股份有限公司

JIN RUH CO.,LTD

REV	PART NO.& SAMPLE NO.	DATE	BY
A	JR 0328		
B			

SHEET	SCALE	UNIT	REV
OF	1:1	mm	ø

TITLE	2.5mm Stereo Plug, Pearl Chrome Plated
CUSTOMER	